CONNECTOR AND HARNESS ROUTING

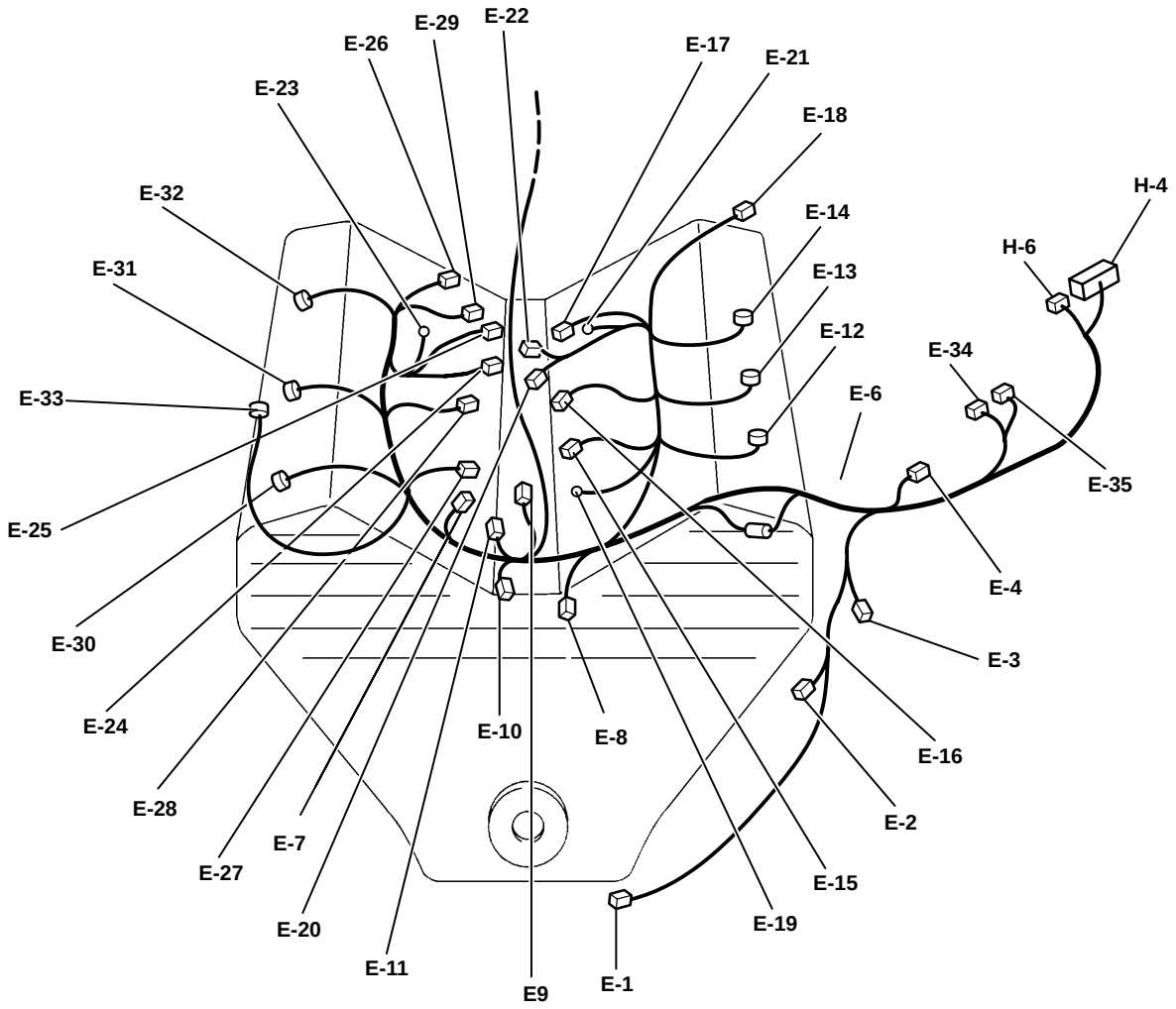

CONNECTOR AND HARNESS ROUTING

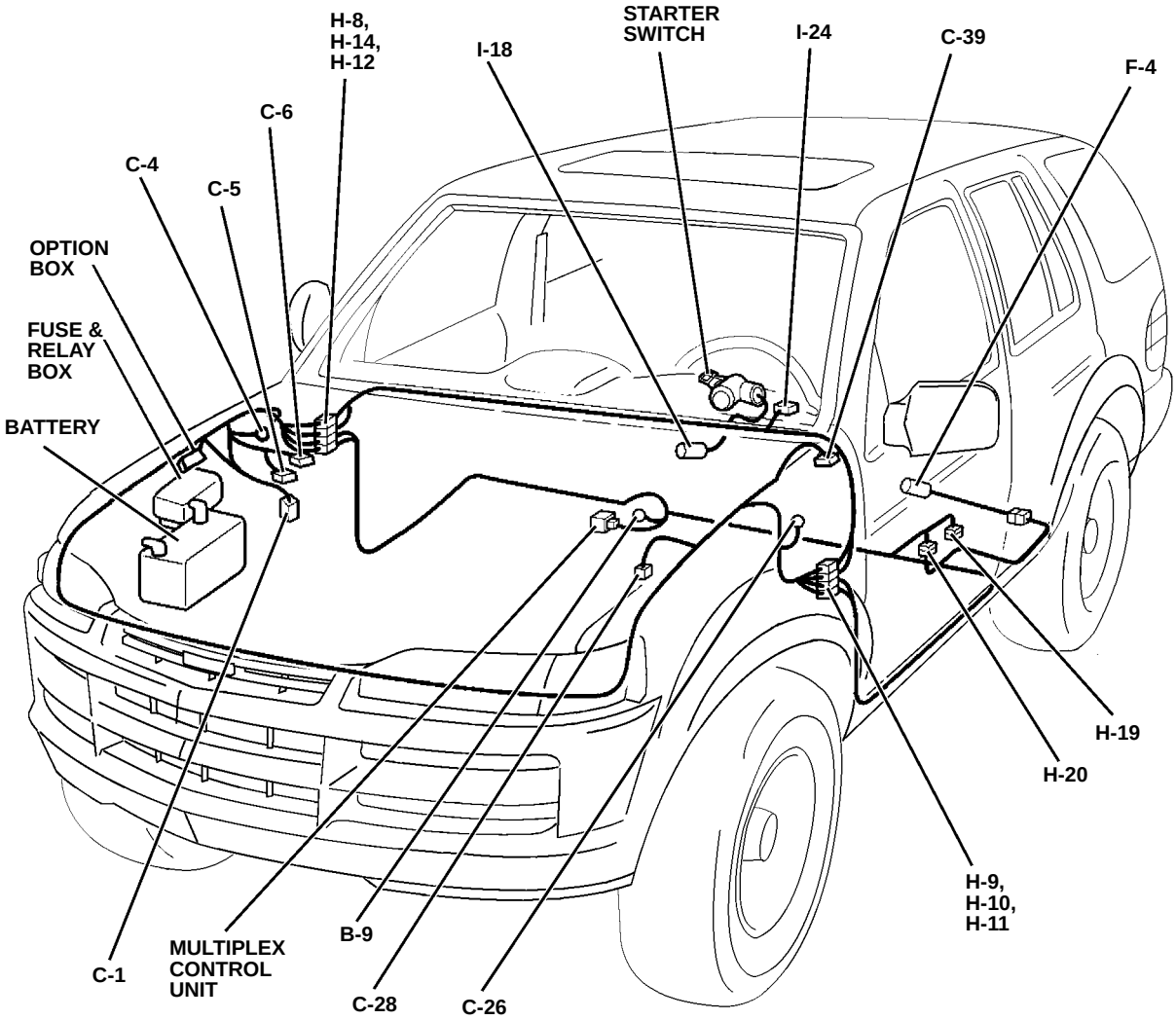

CONNECTOR AND HARNESS ROUTING

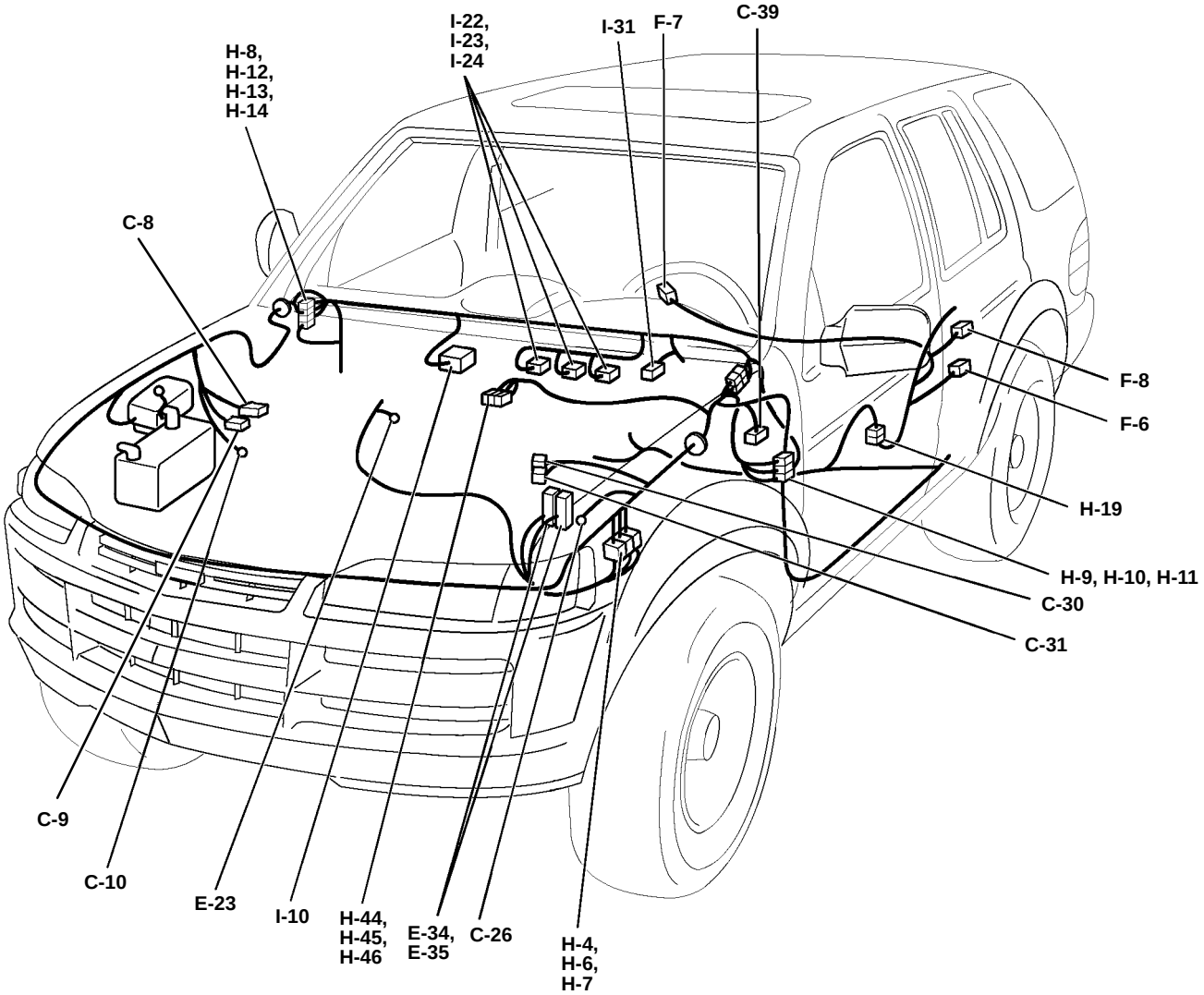

CONNECTOR AND HARNESS ROUTING

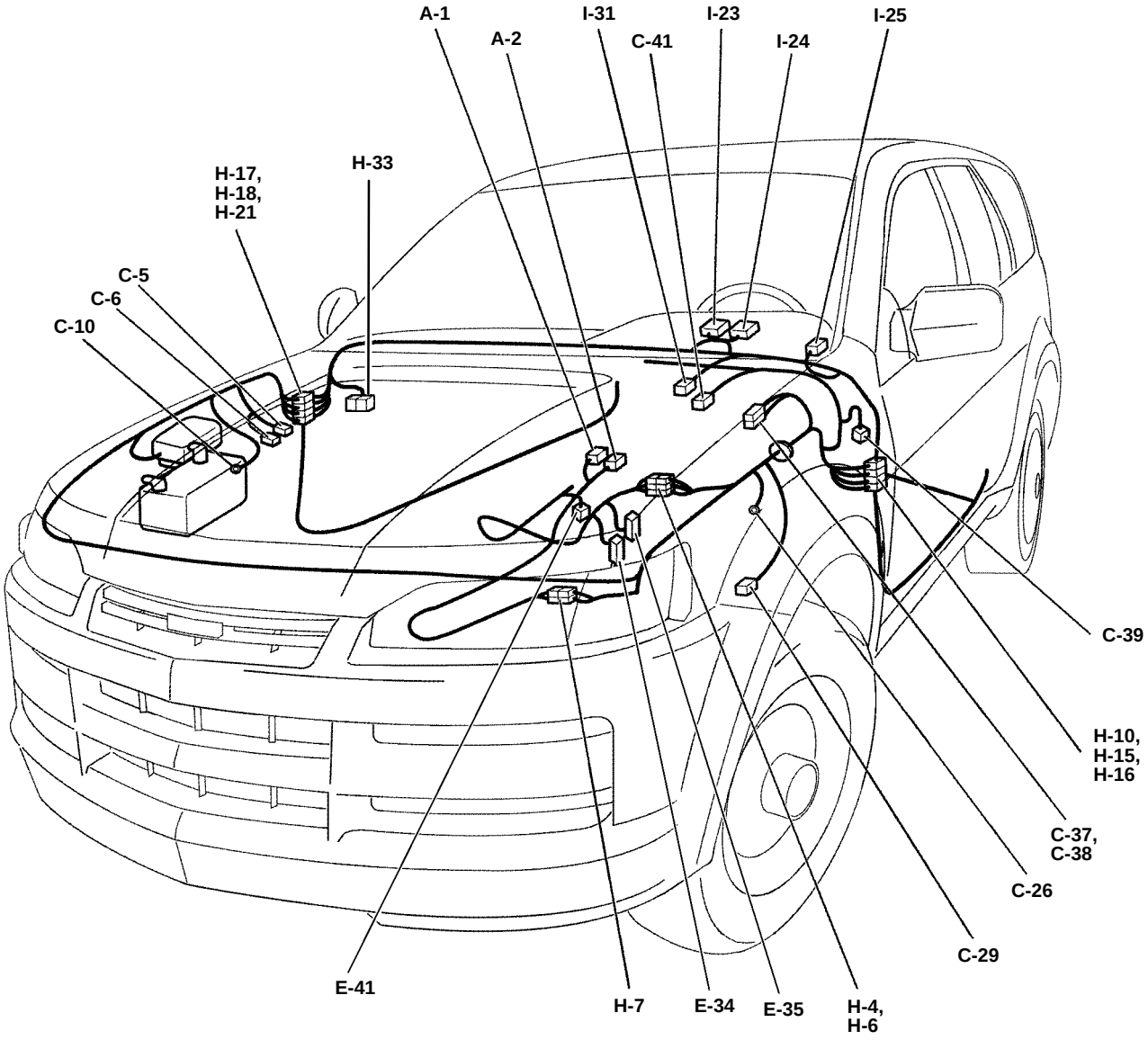

CONNECTOR AND HARNESS ROUTING

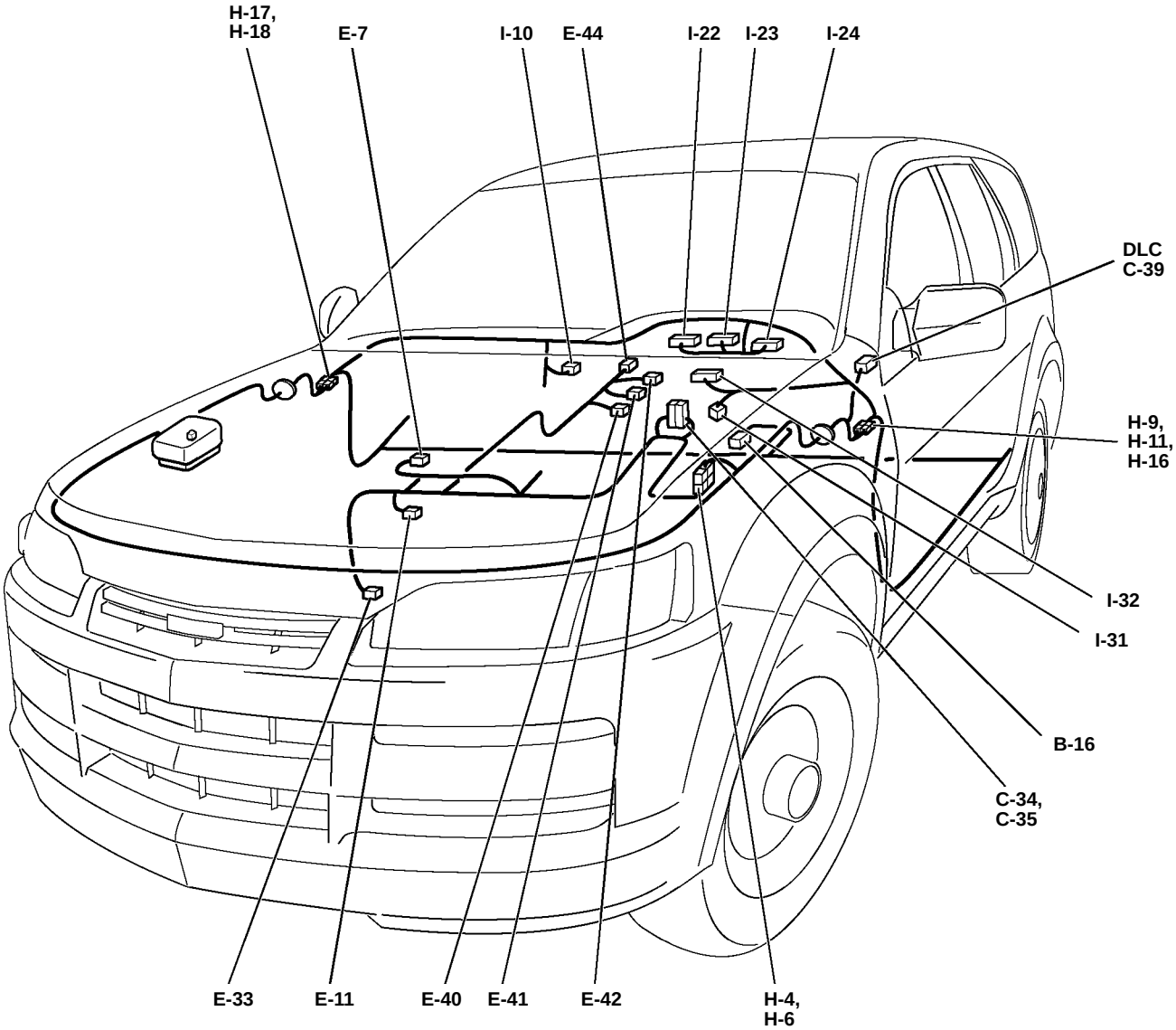

CONNECTOR AND HARNESS ROUTING

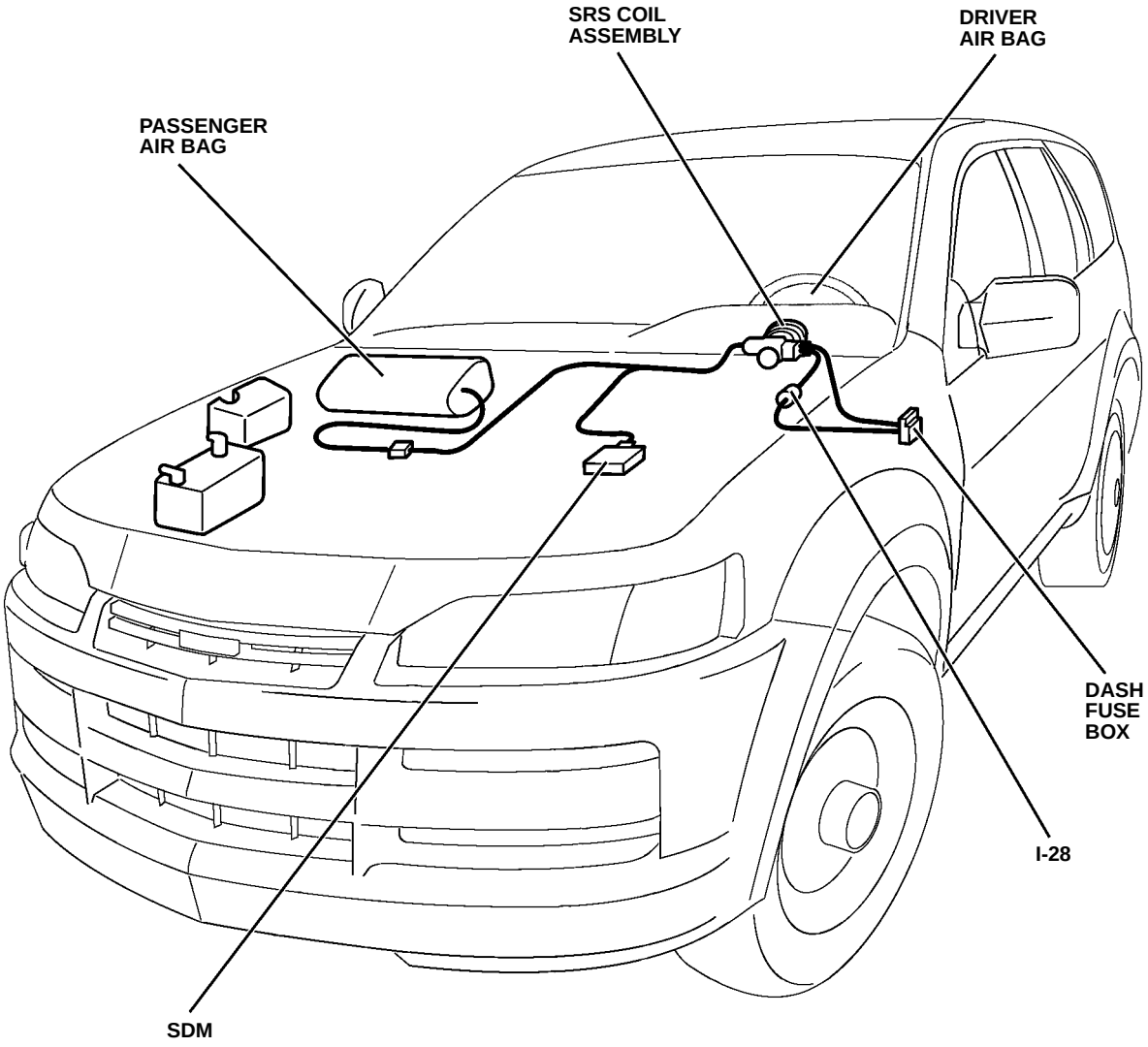
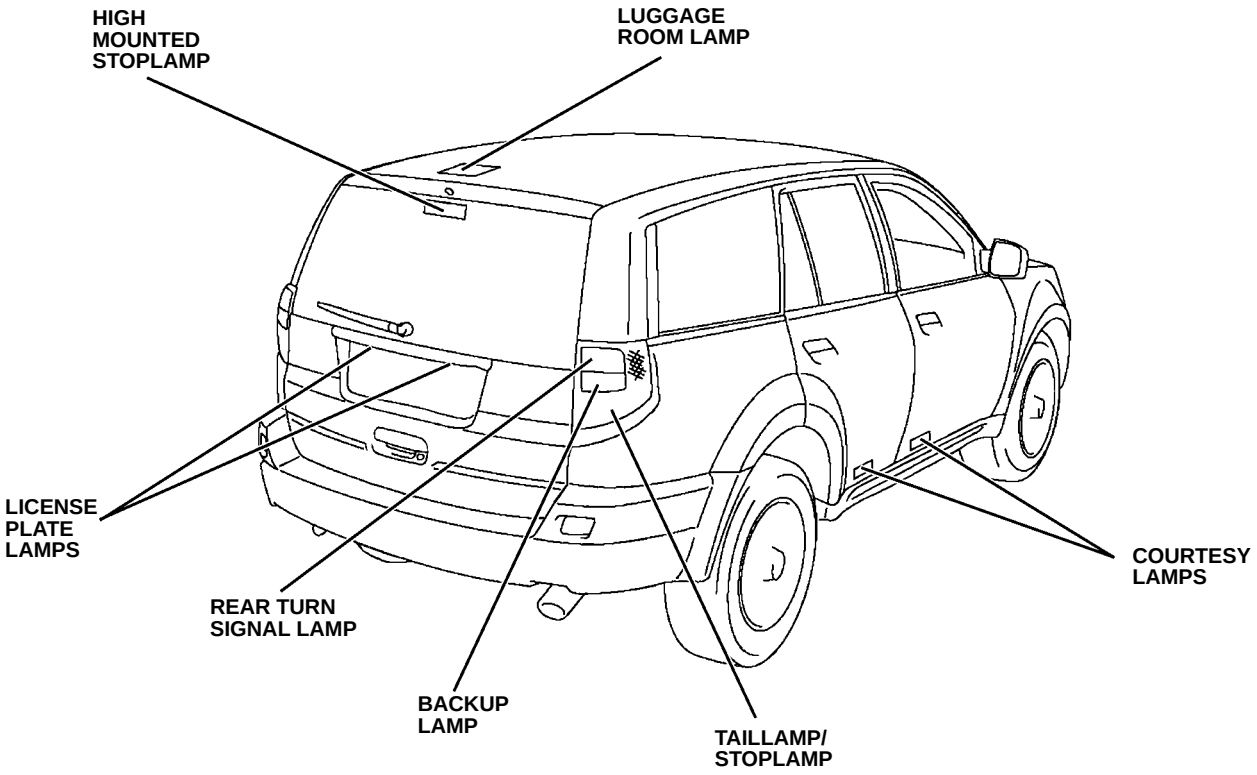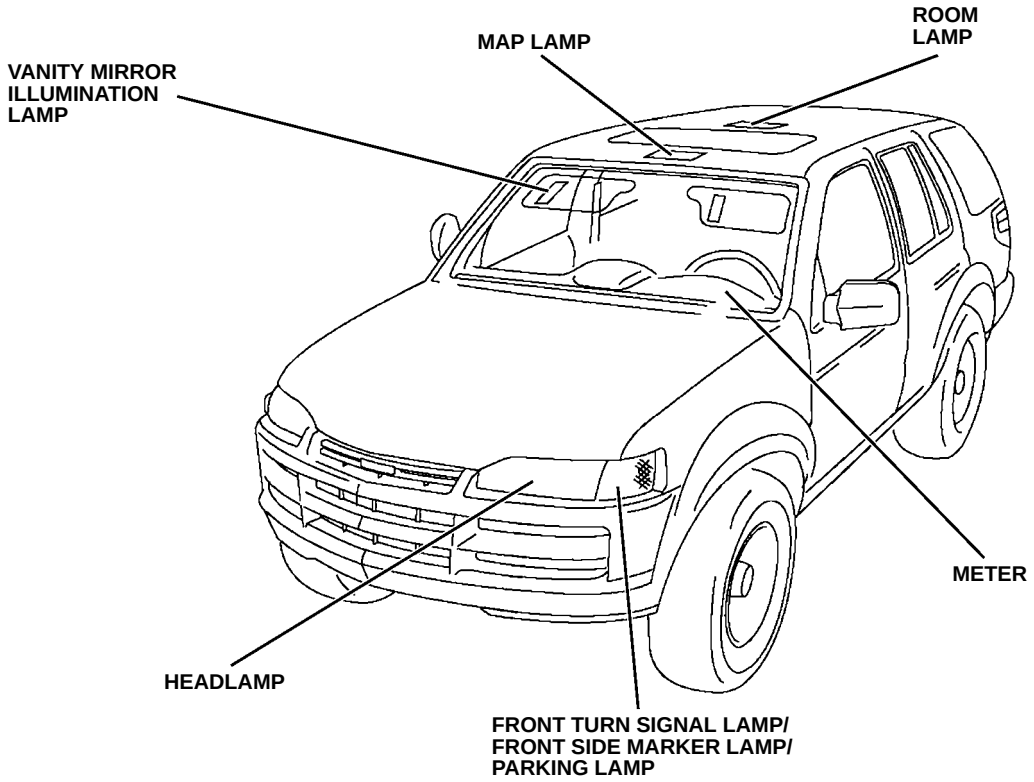
CONNECTOR AND HARNESS ROUTING